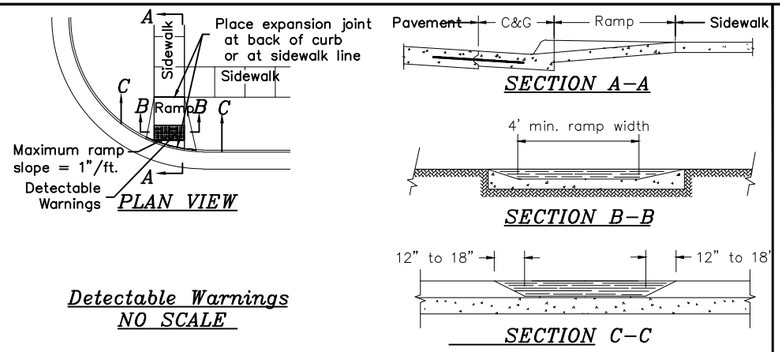

Detectable Warnings
NO SCALE

SIDEWALK RAMP TYPE 1

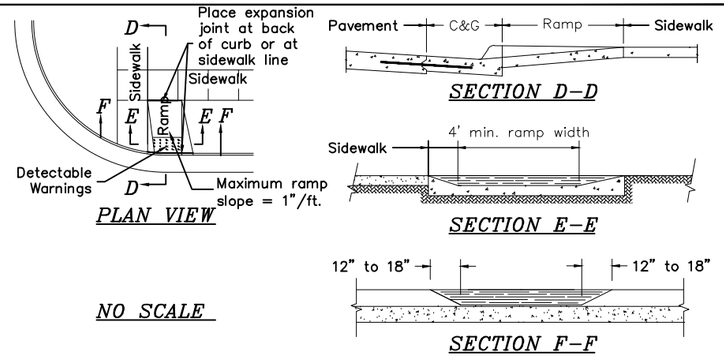

NO SCALE

SIDEWALK RAMP TYPE 2

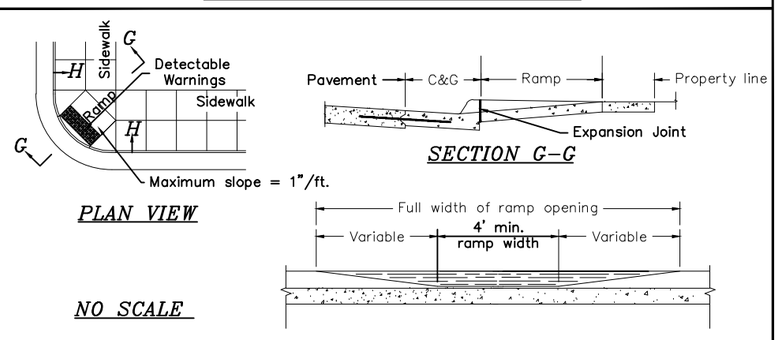

NO SCALE

SIDEWALK RAMP TYPE 3

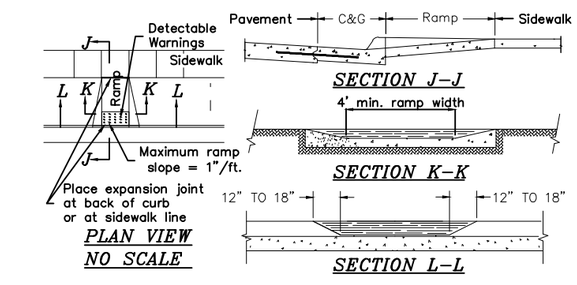

SIDEWALK RAMP TYPE 4

NOTES:

Details shown on this plan apply to all construction or reconstruction of streets, curbs or sidewalks.

Curb cut ramps are to be located as shown on the plans or as directed by the Engineer.

Surface texture of the ramps shall be that obtained by a course brooming, transverse to the slope of the ramp. Care shall be taken to assure a uniform grade on the ramp, free of sags and short grade changes.

The normal gutter line profile shall be maintained through the area of the ramp.

Where sidewalk is shown to be constructed back of an entrance, it shall be 6" thick. For details see Standard Detail No. 1, "Street and Alley Pavement Details".

*6" concrete shall be used for 4' of the ramp beginning at the back–of–curb line and extending up the ramp. The additional 2" thickness of concrete shall be considered subsidiary to the ramp.

PAYMENT:

Concrete sidewalks and steps will be paid for as provided in Section 9A of the Technical Specifications. A payment will be made in addition to the sidewalk area payment for each Type I, Type 2, Type 3 or Type 4 ramp. This amount will be full compensation for removal and disposal, if necessary, of existing curb and gutter, grading, labor, tools, equipment, and incidentals necessary to complete the ramp.

DETECTABLE WARNINGS

a. General. The contractor shall supply all materials, labor, equipment, tools, supplies and incidentals necessary to complete the work in accordance with the following specifications. When Detectable Warnings are used at curb ramps, all grooving will be replaced with a medium to coarse broom finish.

b. Materials. The contractor shall use
(4) Size Detectable warning surfaces shall extend 24 inches (610 mm) minimum in the direction of travel.
(5) Location. At rail crossings the detectable warning surface shall be located so that the edge nearest the rail crossing is 6 inches minimum and 8 inches maximum from the vehicle dynamic envelope (defined as 3 feet from the centerline of the nearest rail).

c. Measurement and Payment.
(1) Measurement will be by the square foot of detectable warning surfaces actually installed in accordance with the plans.
(2) Payment will be by the unit price bid per square foot.

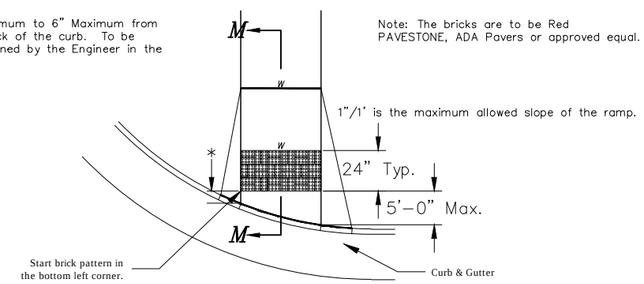

Sidewalk Ramp Brick Pattern Detail

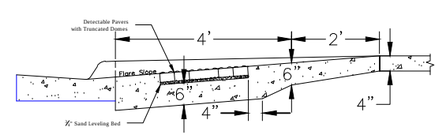

SECTION M–M

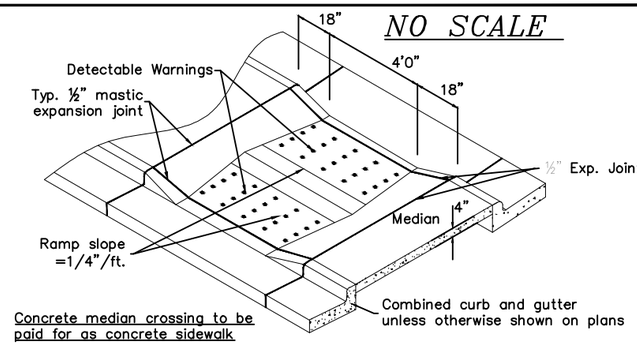

NO SCALE

MEDIAN RAMP CROSSING

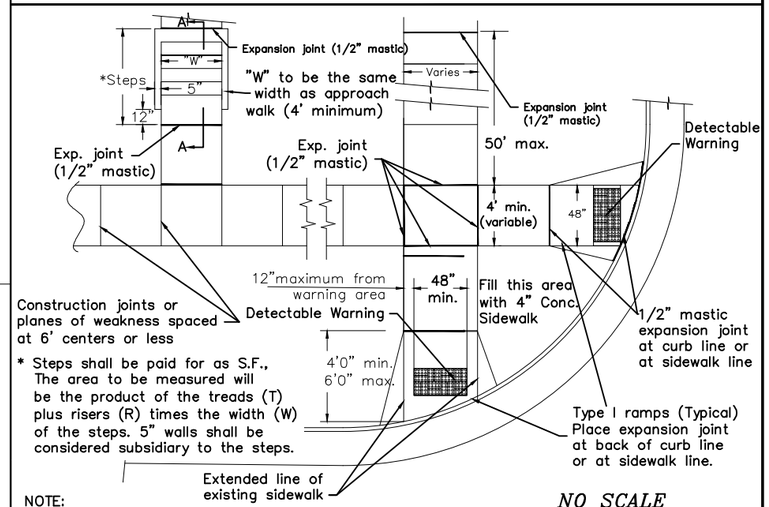

* Steps shall be paid for as S.F., The area to be measured will be the product of the treads (T) plus risers (R) times the width (W) of the steps. 5" walls shall be considered subsidiary to the steps.

NOTE:

Reinforcing bars shown are to be used only when more than four steps are necessary.

Step formula:
Commercial:
Minimum "R"=4"
Maximum "R"=7"
"T"=11"

Residential:
Minimum "R"=4"
Maximum "R"=7–3/4"
"T"=10"
3/8" maximum tolerance between step heights
Where field conditions permit, the steps should not be constructed too steep.

NO SCALE

TYPICAL PLAN

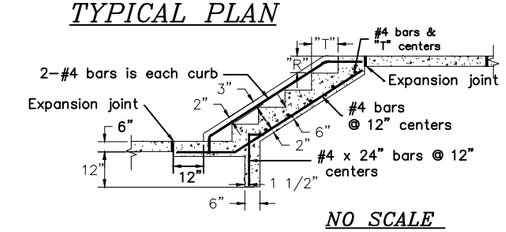

NO SCALE

SECTION A–A

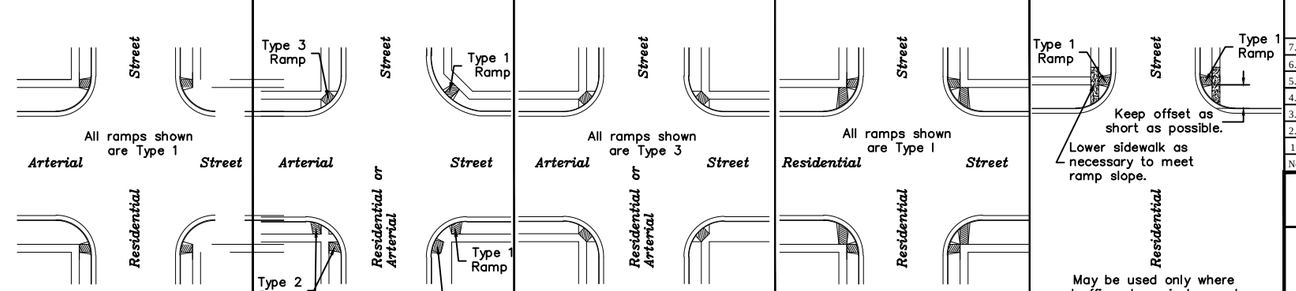

NOTE:
Drawings are not to scale.

No.	Date	Revisions	By	App'd
7.	6/10	Detectable Warnings Changed to Brick Pavers	DJL	HFW
6.	3/09	Step formulas revised & payment added	KSF	HFW
5.	2/06	Revised dim on Detectable Warnings	PLM	HFW
4.	2/06	Added Detectable Warnings to Plan Views	JMS	HFW
3.	3/04	6" concrete for 4' of ramps	KSF	HFW
2.	1/04	"Notes" Add Detectable Warnings	PLM	HHM
1.	1/02	Revised Layout	KSF	HHM

CITY OF HUTCHINSON, KANSAS
ENGINEERING DEPARTMENT

STANDARD DETAILS FOR
SIDEWALK AND STEPS

STANDARD DETAIL	Date: August 2000	SHEET NUMBER
12	Drawn By: P.L.M.	
	Approved By: H.H.M.	___ of ___